THIS DRAWING IS UNPUBLISHED. RELEASED FOR PUBLICATION -.- .
© COPYRIGHT - By - ALL RIGHTS RESERVED.

LOC	DIST
CM	00

REVISIONS

P	LTR	DESCRIPTION	DATE	DWN	APVD
	AD6	REVISED PER ECR-21-101853	09APR2021	JP	VS

1. MATERIAL: HEADER–THERMOPLASTIC POLYESTER GLASS–FILLED 94V–0 (NATURAL) POST–COPPER ALLOY
2. FINISH: CONTACT–TIN PLATE
3. PARTS COMPLY WITH AMP SOLDERABILITY SPEC. NO. 109–11–12.
4. SPECIAL PACKAGING VARIATION FOR IMPROVED PRODUCT PROTECTION

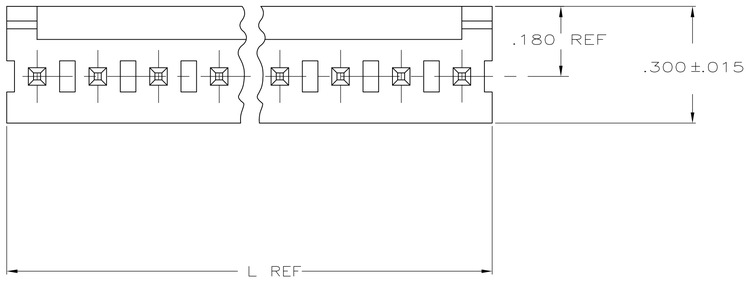

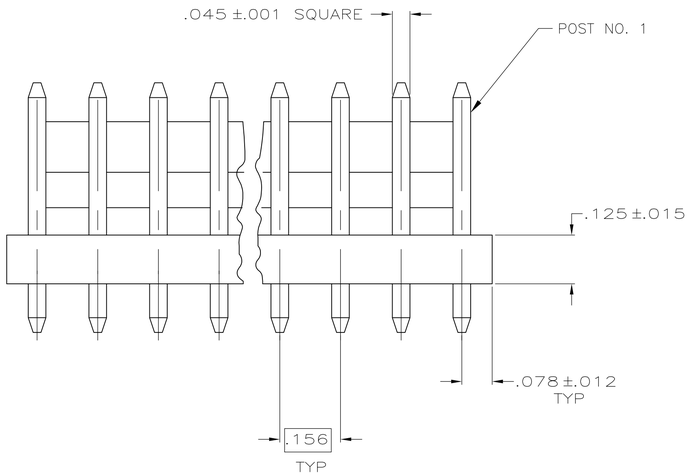

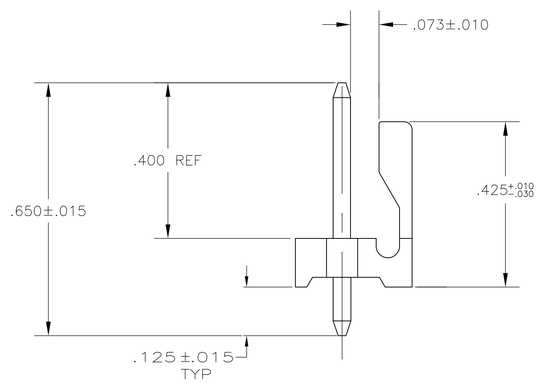

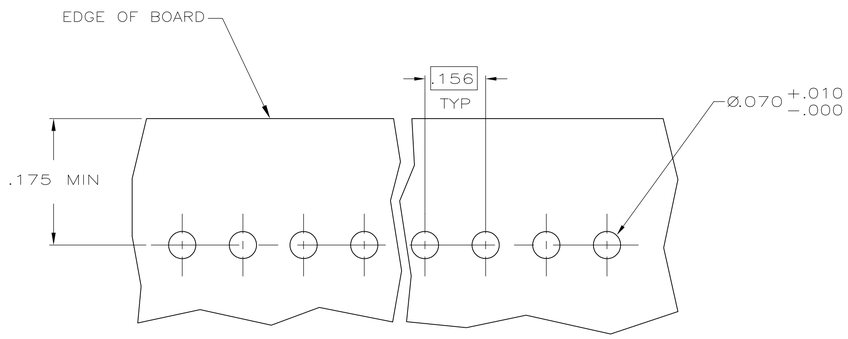

RECOMMENDED MOUNTING HOLE PATTERN
FOR .063 THICK P.C. BOARD

	L MM	L [IN]	NUMBER OF POSITIONS	PART NUMBER
POS.2	39.62	1.560	9	3–640445–1
NONE	31.70	1.248	8	3–640445–8 (4)
	95.10	3.744	24	2–640445–4
	91.14	3.588	23	2–640445–3
	87.17	3.432	22	2–640445–2
	83.21	3.276	21	2–640445–1
	79.25	3.120	20	2–640445–0
	75.29	2.964	19	1–640445–9
	71.32	2.808	18	1–640445–8
	67.36	2.652	17	1–640445–7
	63.40	2.496	16	1–640445–6
	59.44	2.340	15	1–640445–5
	55.47	2.184	14	1–640445–4
	51.51	2.028	13	1–640445–3
	47.55	1.872	12	1–640445–2
	43.59	1.716	11	1–640445–1
	39.62	1.560	10	1–640445–0
	35.66	1.404	9	640445–9
	31.70	1.248	8	640445–8
	27.74	1.092	7	640445–7
	23.77	.936	6	640445–6
	19.81	.780	5	640445–5
	15.85	.624	4	640445–4
	11.89	.468	3	640445–3
	7.92	.312	2	640445–2
OMIT POS.				

THIS DRAWING IS A CONTROLLED DOCUMENT.

DIMENSIONS: INCHES

TOLERANCES UNLESS OTHERWISE SPECIFIED:
0 PLC ±
1 PLC ±
2 PLC ±
3 PLC ± .005
4 PLC ±
ANGLES ±

MATERIAL (1) FINISH (2)

DWN S. HOOVER 05–NOV–2002
CHK D. BOSSI 05–NOV–2002
APVD D. BOSSI 05–NOV–2002

PRODUCT SPEC
APPLICATION SPEC
WEIGHT

TE Connectivity

NAME: MTA–156 HEADER ASSEMBLY, FRICTION LOCK, STRAIGHT .045 SQUARE POST, TIN PLATED

SIZE	CAGE CODE	DRAWING NO	RESTRICTED TO
A1	00779	C–640445	—

CUSTOMER DRAWING | SCALE 5:1 | SHEET 1 OF 1 | REV AD6

4805 (3/11)