REV	CONTENT	CHK	DATE
V0.0	CONTENT	MYZ	21.10.05

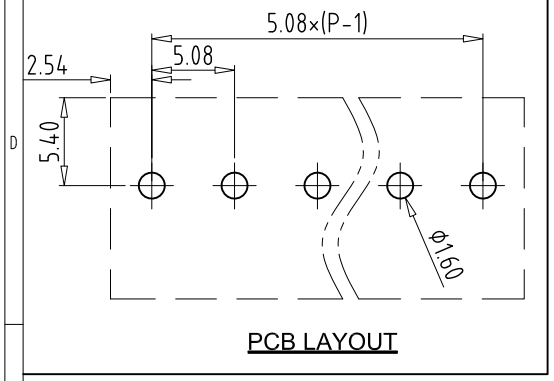

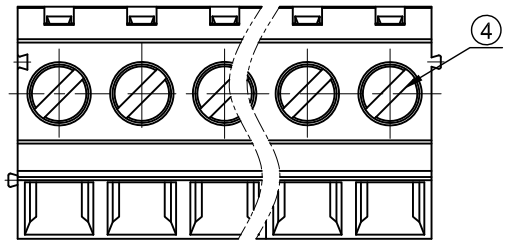

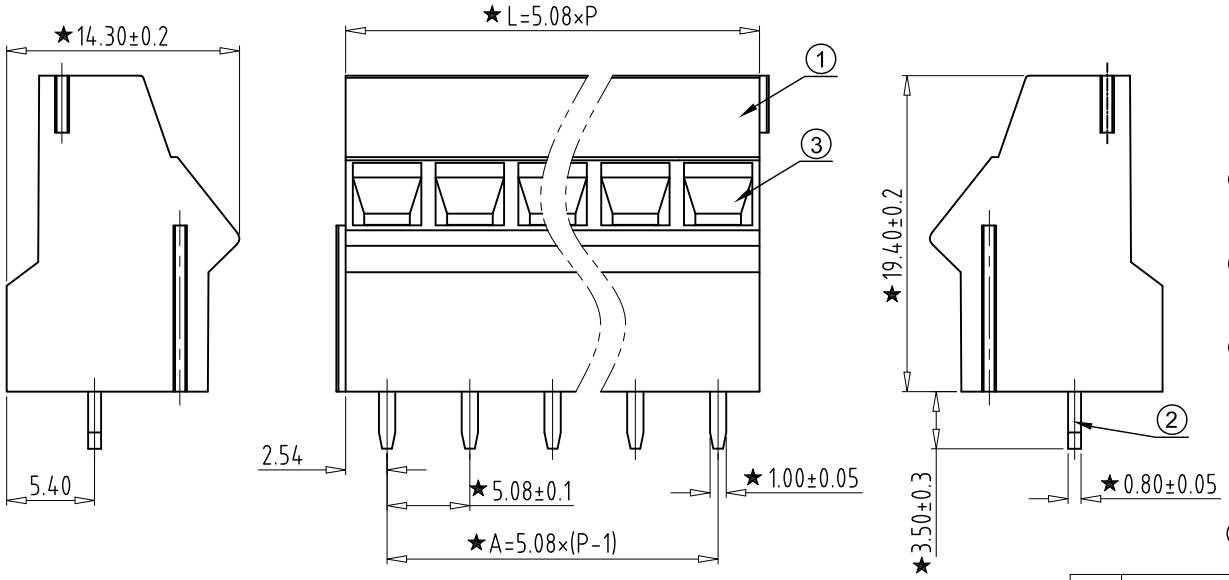

Electrical :

	UL	IEC
1.Rated Voltage :	300V	400V
2.Rated Current :	20A	20A
3.Torque Value :	M3 , 4.43Lb.in	M3 , 0.5N.m
4.Wire Range:	30-12AWG	0.2-2.5mm^2

5.Stripping Length : 10~11mm
6.Withstanding Voltage : AC2000V/1Min.
7.Operating Temperature : -40°C~+105°C
8.RoHS Compliance
9.Safty Approval : c UL us CE
10."★" is the key quality control point

GT504 - 5.08 - XXP - X X - 00
① ② ③ ④ ⑤ ⑥

① Sereies No.

② Pitch

③ Poles
02 02Contacts
03 03Contacts
...
24 24Contacts

④ 1 Single Pitch
2 Double Pitch

⑤ Color: 1 Grey
2 Blue
3 Black
4 Green
5 Orange
6 Red
7 Transparent
8 Yellow
9 White

⑥ Customer Request: 00--Standard

ITEM	NAME OF PART	NO. OF PART	Q"TY	MATERIAL	NOTE
4	SCREW	XX	P	STEEL	Zn Plated
3	BLOCK	XX	P	BRASS	Ni Plated
2	PIN HEADER	XX	P	BRASS	Tin Plated
1	HOUSING	XX	1	PA66 UL94V-0	SEE NOTE

DWG.	MYZ	DATE	21.10.05	SIZE	A4	UNITS mm	SHEET/OF 1 / 1
CHK.		DATE		SCALE	1:1		
APP.		DATE		NAME	GT504-5.08-XXP-XX-00		
Golten 宁波冠泰电子有限公司 NINGBO GOLTEN ELECTRONICS CO., LTD.				DWGNO.	XXXX		

Total Pitch Tolerances in mm									Nominal dimension range in mm									⊥		≒	—		//
over 0 to 30	over 30 to 53	over 53 to 70	over 70 to 90	over 90 to 115	over 115 to 150	over 150 to 250	over 250 to 350	over 350 to 500	over 0 to 30	over 30 to 53	over 53 to 70	over 70 to 90	over 90 to 115	over 115 to 150	over 150 to 200	over 200 to 250	over 250 to 320	over 0 to 10	over 10	all	over 0 to 100	over 100 to 150	over 150
±0.18	±0.20	±0.25	±0.3	±0.35	±0.44	±0.60	±0.70	±0.85	±0.20	±0.25	±0.30	±0.35	±0.44	±0.55	±0.70	±0.80	±0.90	0.2	0.3	0.3	0.2	0.3	0.5