TILT CARRING HANDLES (ALUMINIUM BAR)

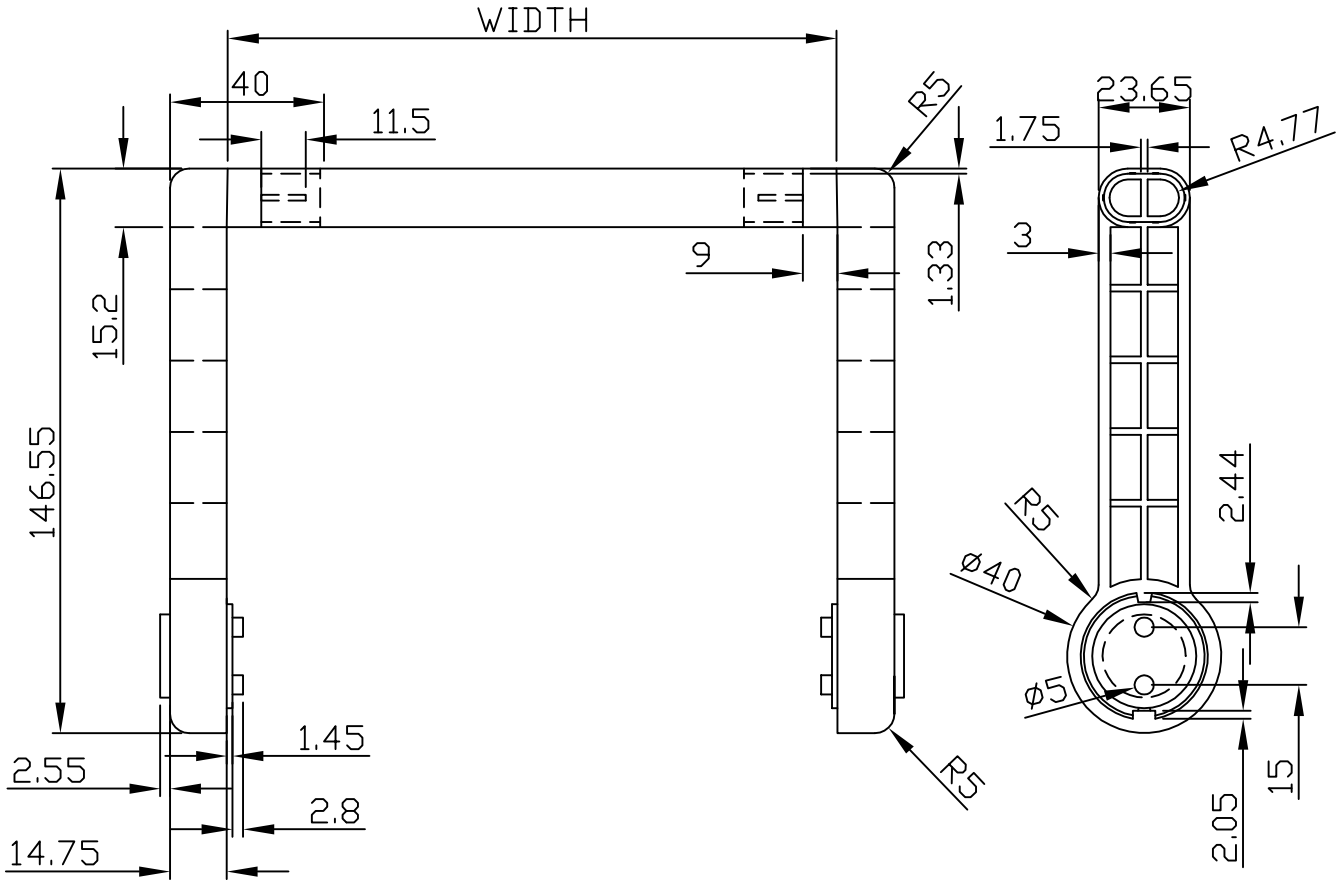

PART NO.	DESCRIPTION
G1600140	HANDLE FOR G738,G767,G768 WIDTH=140mm
G1600225	HANDLE FOR G747,G748,G749,G716,G717 WIDTH=225mm
G1600260	HANDLE FOR G758,G753,G754,G731,G733 WIDTH=260mm
G1600095	HANDLE FOR G760,G761,G762 WIDTH=095mm
G1600156	HANDLE FOR G763,G764,G765 WIDTH=156mm
G1600200	HANDLE FOR G769,G770,G771 WIDTH=200mm
G1600245	HANDLE FOR G750,G751,G752,G720,G721,G722 WIDTH=245mm

宣又實業有限公司 GAINTA INDUSTRIES LTD.	設計 DES'D BY	繪圖 DRA'D BY	核圖 CHK'D BY	比例 SCALE	日期 DATE	材質 MATE.	圖名 TITLE:	圖號 DWG NO.:	圖號 REVISID	說明 DESCRIPTION
				1:2		NYLON+ALU	HANDLES			