REV	CONTENT	CHK	DATE
V0.0	CONTENT	ZML	25.05.05

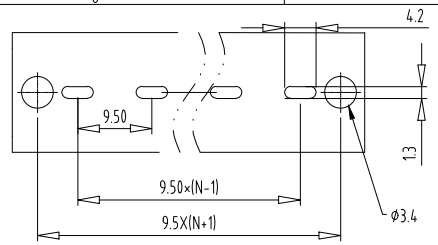

PCB LAYOUT

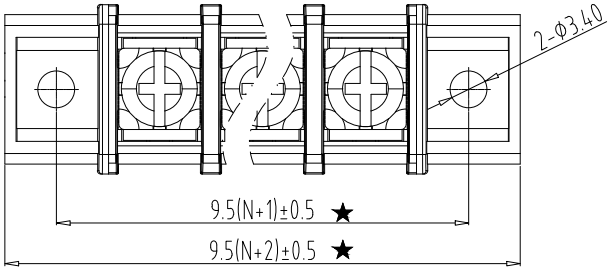

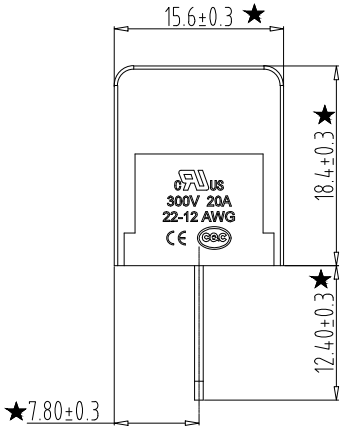

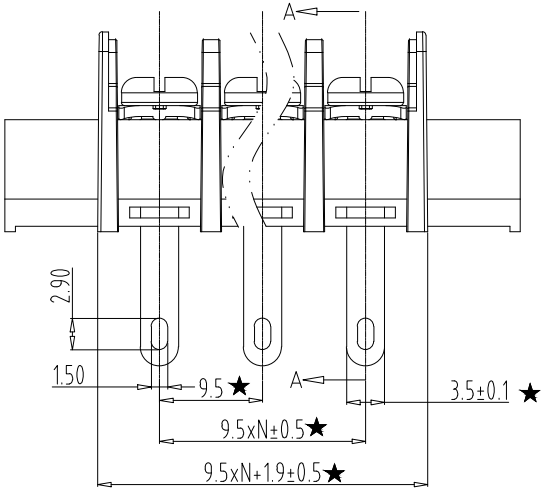

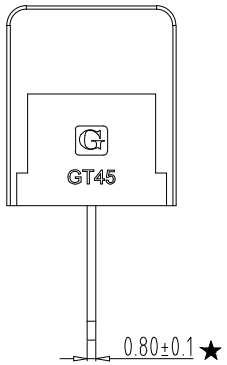

Electrical :

1.Rated Voltage : 300V

2.Rated Current : 20A

3.Torque Value : M4,10.53Lb.in

4.Wire Range :22-12AWG

5.Stripping Length : 9-10mm

6.Withstanding Voltage : AC2000V/1Min.

7.Operating Temperature : -40°C~+105°C

8.RoHS Compliance

9."★" is the key quality control point

GT45H-A - XXP - X X - 00

① ② ③ ④ ⑤

① Sereies No.

② 1 Single Pitch
2 Double Pitch

③ poles

02	02Contacts
03	03Contacts
...	
24	24Contacts

④ Color:

1 Grey	2 Blue
3 Black	4 Green
5 Orange	6 Red
7 Transparent	8 Yellow
9 White	

⑤Customer Reques:00--Standard

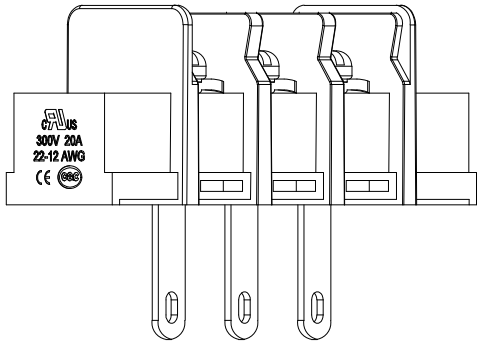

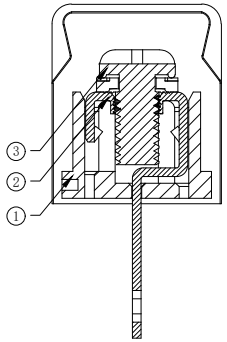

SCETION A-A

ITEM	NAME OF PART	NO. OF PART	Q"TY	MATERIAL	NOTE
3	SCREW	XX	P	STEEL	Ni Plated
2	PIN HEADER	XX	P	COPPER ALLOY	Tin Plated
1	HOUSING	XX	1	PA66 UL94V-0	SEE NOTE

DWG.	ZML	DATE	25.05.05	SIZE	A4	UNITS	mm
CHK.		DATE		SCALE	1:1	SHEET/OF	1 / 1
APP.		DATE		NAME	GT45H-A-XXP-XX-00		
				DWGNO.	XXXX		

宁波冠泰电子有限公司
NINGBO GOLTEN ELECTRONICS CO., LTD.

Total Pitch Tolerances in mm									Nominal dimension range in mm									⊥		÷	—		//
over 0 to 30	over 30 to 53	over 53 to 70	over 70 to 90	over 90 to 115	over 115 to 150	over 150 to 250	over 250 to 350	over 350 to 500	over 0 to 30	over 30 to 53	over 53 to 70	over 70 to 90	over 90 to 115	over 115 to 150	over 150 to 200	over 200 to 250	over 250 to 320	over 0 to 10	over 10	all	over 0 to 100	over 100 to 150	over 150
±0.18	±0.20	±0.25	±0.3	±0.35	±0.44	±0.60	±0.70	±0.85	±0.20	±0.25	±0.30	±0.35	±0.44	±0.55	±0.70	±0.80	±0.90	0.2	0.3	0.3	0.2	0.3	0.5