REV	CONTENT	CHK	DATE

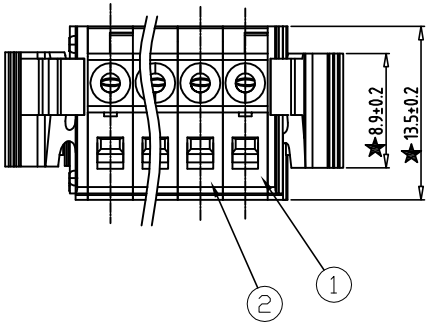

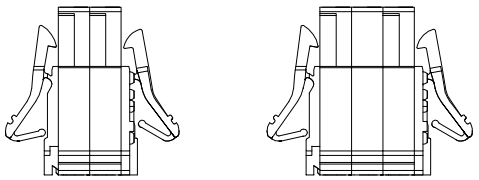

Electrical :

	UL	IEC
1.Rated Voltage :	300V	160V
2.Rated Current :	10A	10A
3.Wire Range:	28-14AWG	0.2-1.5mm^2

4.Stripping Length : 7-8mm
5.Withstanding Voltage : AC1600V/1Min.
6.Operating Temperature : -40°C~+105°C
7.RoHS Compliance
8.Safty Approval : c UL us CE
9."★" is the key quality control point

MC001G - 3.5 - XXP - X X - 00
① ② ③ ④ ⑤ ⑥

① Sereies NO.

② Pitch

③ Poles
- 02 02Contacts
- 03 03Contacts
- ...
- 24 24Contacts

④ 1 Single Pitch
2 Double Pitch

⑤ Color: 1 Grey
2 Blue
3 Black
4 Green
5 Orange
6 Red
7 Transparent
8 Yellow
9 White

⑥ Customer Request: 00--Standard

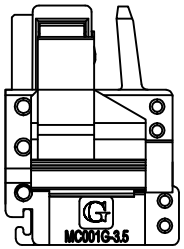

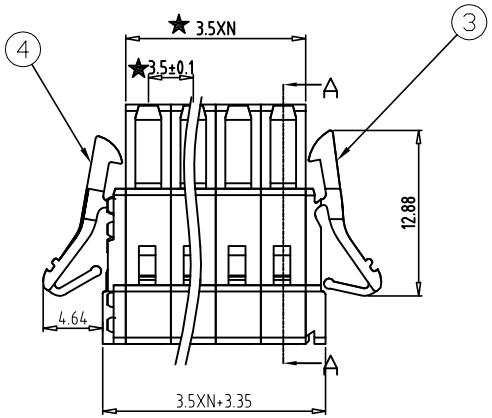

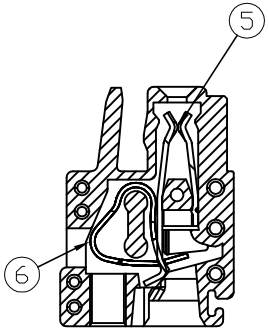

SECTION A-A

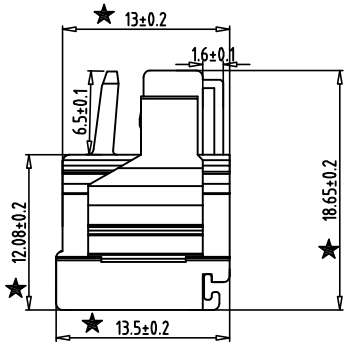

ITEM	NAME OF PART	NO. OF PART	Q"TY	MATERIAL	NOTE
6	SPRING	XX	N	Stainless Steel	--
5	CLAMP	XX	N	Copper Alloy	Sn Plated
4	COVER B	XX	1	PA66 UL94V-0	SEE NOTE
3	COVER A	XX	1	PA66 UL94V-0	SEE NOTE
2	HOUSING B	XX	N-2	PA66 UL94V-0	SEE NOTE
1	HOUSING A	XX	2	PA66 UL94V-0	SEE NOTE

DWG.	SYJ	DATE	25.03.26	SIZE	A4	UNITS mm	SHEET/OF 1 / 1
CHK.		DATE		SCALE	1:1		
APP.		DATE		NAME	MC001G-3.5-XXP-XX-00		
Golten 宁波冠泰电子有限公司 NINGBO GOLTEN ELECTRONICS CO., LTD.				DWGNO.	XXXX		

Total Pitch Tolerances in mm									Nominal dimension range in mm									⊥		⌭	—		//
over 0 to 30	over 30 to 53	over 53 to 70	over 70 to 90	over 90 to 115	over 115 to 150	over 150 to 250	over 250 to 350	over 350 to 500	over 0 to 30	over 30 to 53	over 53 to 70	over 70 to 90	over 90 to 115	over 115 to 150	over 150 to 200	over 200 to 250	over 250 to 320	over 0 to 10	over 10	all	over 0 to 100	over 100 to 150	over 150
±0.18	±0.20	±0.25	±0.3	±0.35	±0.44	±0.60	±0.70	±0.85	±0.20	±0.25	±0.30	±0.35	±0.44	±0.55	±0.70	±0.80	±0.90	0.2	0.3	0.3	0.2	0.3	0.5